(formerly HP2 Color Tuning / HP2-LED-TR-C27)

HP2 - In-grade - Line Voltage - LED Color Tuning - Deep Housing - Faceplate Flush Mount

TEMPORARILY UNAVAILABLE

IP68

Downloads
- Product Images (.zip)
- Technical Drawing (.zip)
- IES Files (.zip)
- BIM - Revit (.zip)
- Installation Instructions (.pdf)

Product Variant Examples

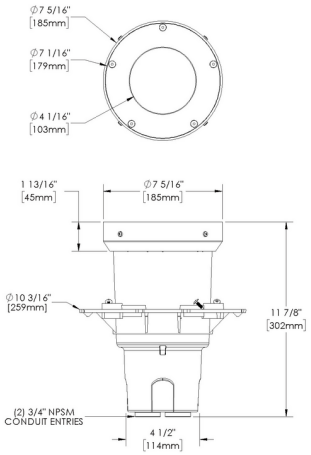

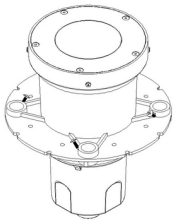

Copyright © B-K Lighting, Inc. This document contains proprietary information of B-K Lighting, inc. and its receipt or possession does not convey any rights to reproduce, disclose its contents, or to manufacture, use or sell anything it may describe.

Technical information is subject to change at the discretion of B-K Lighting Inc. For the most current technical data, please refer to bklighting.com

HP2 - In-grade - Line Voltage - LED Color Tuning - Deep Housing - Faceplate Flush Mount

Available Logic & Configurations

HP2-	IN-	LID-	LCT-	___-	FFM-	HDE-
01	02	03	04	05	06B	06D

01 SERIES
HP2 - HP2
02 CATEGORY
IN - In-grade
03 DRIVER
LID - Line Voltage
04 LIGHT SOURCE (TYPE)
LCT - LED Color Tuning

05 MATERIAL
AL - Aluminum
BR - Brass
SS - Stainless Steel
06B MOUNT
FFM - Faceplate Flush Mount
06D VERSION
HDE - Deep Housing

C27-	___-	___-	___-	___-	WL00-	___-	___-
07	08	09	10A	10B	11	12	13

07 LIGHT SOURCE
C27 - 1650-8000K + Saturation and Hue CRI90 - 35W
08 OPTIC
SP - Spot
FL - Flood
WFL - Wide Flood

09 CONTROL
BT - Bluetooth
010 - 0-10V (120V,277V)
DMX - DMX
10A LENS
09 - Clear (Standard)
12 - Soft Focus
13 - Rectilinear
10B SHIELDING
00 - Not included (Standard)
11 - Honeycomb Baffle
11 WIRING LENGTH
WL00 - Standard
12 FINISH
Standard Finishes
BLP, **BZP**, **WHP**, **SAP**, **BLW**, **BZW**, **WHW**, **VER**
Premium Finishes
CMG, **SMG**, **RMG**, **AMG**, **TXF**, **BCM**, **BGE**, **WCP**, **OCP**, **HUG**, **ABP**, **BPP**, **SDS**, **WIR**, **CAP**, **CRM**, **AQW**, **NBP**
Other - RAL
RAL
Other - Custom Color
CUS
Brass Finishes
MAB, **POB**, **MIT**
Stainless Steel Finishes
MAS, **POS**
13 OPTION
ER - DMX End Run (End Run required per loop)
HD - Half Dome - HP2
RO - Rock Guard with Optical Opening - HP2
GM-R - Round Grout Mask - HP2/DR2
GM-S - Square Grout Mask - HP2/DR2
TC - Traction Control Lens - HP2
AH - Accessory Holder - HP2
RG - Rock Guard - HP2
GS - Glare Shield - HP2

NOTE: Not all configurations may be compatible with one another. Please configure the product for specific 2D, Photometry, Downloads, Spec Sheet and Compatible mountings and power supplies.

Copyright © B-K Lighting, Inc. This document contains proprietary information of B-K Lighting, inc. and its receipt or possession does not convey any rights to reproduce, disclose its contents, or to manufacture, use or sell anything it may describe.

Technical information is subject to change at the discretion of B-K Lighting Inc. For the most current technical data, please refer to bklighting.com

HP2 - In-grade - Line Voltage - LED Color Tuning - Deep Housing - Faceplate Flush Mount

Features

Anti-condensation vent allows moisture to exit the fixture but never enter in

Internal optics with adjustable aim

Lens factory adhered to fixture cap providing hermetically sealed optical compartment

Secured with flush, countersunk tamper resistant hardware

Machined solid billet faceplate provides unmatched strength and durability

Heavy wall corrosion-free composite housing for direct burial in soil or concrete

Designed and engineered for easy install

Manufactured in the USA with sustainable processes

Water-tight anti-siphon plug prevents moisture ingress from wireways

Easily replaceable modular components reduce waste and extend fixture life

Technical

Driver: Line Voltage

Light Source (Type): LED Color Tuning

Material: Aluminum, Brass, Stainless Steel

CCT (K): 1600 - 4000, 1650 - 8000

CRI: 90

Input Power (W): 35

Delivered Lumens (lm): 998 - 1359

Beam Angle (°): 20, 40, 60

Control: 0-10V (120V,277V), Bluetooth, DMX

Mount: Faceplate Flush Mount

Version: Deep Housing

Lens: Soft Focus, Clear (Standard), Rectilinear

Shielding: Not included (Standard), Honeycomb Baffle

Wiring Length: Standard

Finish: Standard Finishes, Premium Finishes, Other - RAL, Other - Custom Color, Brass Finishes, Stainless Steel Finishes

Option: DMX End Run (End Run required per loop), Accessory Holder - HP2, Round Grout Mask - HP2/DR2, Square Grout Mask - HP2/DR2, Glare Shield - HP2, Half Dome - HP2, Rock Guard - HP2, Rock Guard with Optical Opening - HP2, Traction Control Lens - HP2

Material Detail: Furnished in stainless steel (304)., Furnished in brass (360)., Furnished in copper-free aluminum (6061-T6).

Aiming: Knuckle enables 180° vertical and 360° horizontal rotation. ‘O’ Ring helps maintain fixture position. Design withstands 73 lb. static load prior to movement for optical alignment with a ½” pipe thread for mounting. (Combined legacy knuckle options)

Light Source Detail: LED Color Tuning

Optics: Interchangeable optics permit changes in the field.

Hardware: Tamper-resistant, stainless steel hardware. Hardware is black oxide treated for additional corrosion resistance.

Sealing: High temperature silicone ‘O’ Ring at faceplate. HydroLock® technology provides fail-safe water barrier between junction box and interior components.

Note: If you choose a Lens and/or Shielding option, Accessory Holder required.

Finish Detail: Powder coat or metal finish options available for brass material., Metal finish option only for stainless steel material., StarGuard, our 15-stage chromate-free process, cleans and conversion coats aluminum components prior to application of Class ‘A’ TGIC polyester powder coating. It is RoHS compliant.

Warranty: 5-year limited warranty.

Copyright © B-K Lighting, Inc. This document contains proprietary information of B-K Lighting, inc. and its receipt or possession does not convey any rights to reproduce, disclose its contents, or to manufacture, use or sell anything it may describe.

Technical information is subject to change at the discretion of B-K Lighting Inc. For the most current technical data, please refer to bklighting.com

HP2 - In-grade - Line Voltage - LED Color Tuning - Deep Housing - Faceplate Flush Mount

Finishes

STANDARD FINISHES

[BLP] Satin Black

[BZP] Satin Bronze

[WHP] Satin White

[SAP] Satin Aluminum

[BLW] Black Wrinkle

[BZW] Bronze Wrinkle

[WHW] White Wrinkle

[VER] Verde

PREMIUM FINISHES

[CMG] Cascade Mountain Granite

[SMG] Sierra Mountain Granite

[RMG] Rocky Mountain Granite

[AMG] Aleutian Mountain Granite

[TXF] Textured Forest

[BCM] Black Chrome

[BGE] Beige

[WCP] Weathered Copper

[OCP] Old Copper

[HUG] Hunter Green

[ABP] Antique Brass Powder

[BPP] Brown Patina Powder

[SDS] Sonoran Desert Sandstone

[WIR] Weathered Iron

[CAP] Clear Anodized Powder

[CRM] Cream

[AQW] Antique White

[NBP] Natural Brass Powder

OTHER - RAL

[RAL] RAL Color

OTHER - CUSTOM COLOR

[CUS] Custom Color

BRASS FINISHES

[MAB] Machined (Brass)

[POB] Polished (Brass)

[MIT] Mitique

STAINLESS STEEL FINISHES

[MAS] Machined (Stainless Steel)

[POS] Polished (Stainless Steel)

Copyright © B-K Lighting, Inc. This document contains proprietary information of B-K Lighting, inc. and its receipt or possession does not convey any rights to reproduce, disclose its contents, or to manufacture, use or sell anything it may describe.

Technical information is subject to change at the discretion of B-K Lighting Inc. For the most current technical data, please refer to bklighting.com

HP2 - In-grade - Line Voltage - LED Color Tuning - Deep Housing - Faceplate Flush Mount

Light Source

Light Source	Optic	Beam Angle	CCT (K)	CRI	R9	Input Power (W)	Delivered Lumens (Lm)	CBCP
C27	FL - Flood	36	1650 - 8000	90	>50	35		
C27	SP - Spot	36	1650 - 8000	90	>50	35		
C27	WFL - Wide Flood	36	1650 - 8000	90	>50	35		
C27	SP - Spot	20				35	1250	3025
C27	SP - Spot	20				35	1345	3255
C27	SP - Spot	20	1600 - 4000	90	>50	35	1359	3288
C27	FL - Flood	40				35	1169	1639
C27	FL - Flood	40				35	1258	1764
C27	FL - Flood	40	1600 - 4000	90	>50	35	1271	1782
C27	WFL - Wide Flood	60				35	998	1060
C27	WFL - Wide Flood	60				35	1074	1140
C27	WFL - Wide Flood	60	1600 - 4000	90	>50	35	1085	1152

Copyright © B-K Lighting, Inc. This document contains proprietary information of B-K Lighting, inc. and its receipt or possession does not convey any rights to reproduce, disclose its contents, or to manufacture, use or sell anything it may describe.

Technical information is subject to change at the discretion of B-K Lighting Inc. For the most current technical data, please refer to bklighting.com