VERSA STAR - Ceiling Recessed - Low Voltage - LED High-Power - Junction Box

(formerly Versa Star / VS-LED), (formerly Versa Star / VSL-LED), (formerly Versa Star / VQ-LED), & (formerly Versa Star / VQL-LED)

Configure

VS - CR - LOD - LHP - ___ - ___ - JB - ___ - ___ - ___ - ___ - ___ - WL00 - ___

01 02 03 04 05 06A 06B 06C 07 08 10A 10B 11 12

VERSA STAR - Ceiling Recessed - Low Voltage - LED High-Power - Junction Box - Standard

01 SERIES
VS - VERSA STAR

02 CATEGORY
CR - Ceiling Recessed

03 DRIVER
LOD - Low Voltage

04 LIGHT SOURCE (TYPE)
LHP - LED High-Power

05 MATERIAL
AL - Aluminum
BR - Brass
SS - Stainless Steel

06A SHAPE
RO - Round
SQ - Square

06B MOUNT
JB - Junction Box

06C STYLE
FLDC - Faceplate: Louvered - Pattern C - 30° Angle - Round
FLDD - Faceplate: Louvered - Pattern D - 30° Angle - Rectangular
FLDF - Faceplate: Louvered - Pattern F - 0° Angle - Round
FLDG - Faceplate: Louvered - Pattern G - 0° Angle - Rectangular
FSD - Faceplate: Standard

07 LIGHT SOURCE
e100 - 2700K CRI80 - 5W (29 - 309 lm)
e101 - 3000K CRI80 - 5W (29 - 316 lm)
e102 - 4000K CRI80 - 5W (33 - 355 lm)
e103 - Amber - 5W
e104 - 2700K CRI90 - 5W
e105 - 3000K CRI90 - 5W
e106 - 3500K CRI90 - 5W

08 OPTIC
NSP - Narrow Spot (13°)
SP - Spot (16°)
SP2 - Spot (23°)
MFL - Medium Flood (31°)

10A LENS
12 - Soft Focus
13 - Rectilinear

10B SHIELDING
00 - Not included (Standard)
11 - Honeycomb Baffle

11 WIRING LENGTH
WL00 - Standard

12 FINISH
Stainless Steel Finishes
MAS, **POS**
Standard Finishes
BLP, **BZP**, **WHP**, **SAP**, **BLW**, **BZW**, **WHW**, **VER**
Premium Finishes
CMG, **RMG**, **AMG**, **TXF**, **BCM**, **BGE**, **WCP**, **OCP**, **HUG**, **ABP**, **BPP**, **SDS**, **WIR**, **CAP**, **CRM**, **AQW**, **NBP**
Brass Finishes
MAB, **POB**, **MIT**
Other - RAL
RAL
Other - Custom Color
CUS

Compatible Mounting & Power Supply Option Types

(Configured separately. For the full list of compatible options, please use the "Order Separately" section located on **this product web page**.)


In-grade HP2


Transformer


Universal Power Module

Copyright © B-K Lighting, Inc. This document contains proprietary information of B-K Lighting, inc. and its receipt or possession does not convey any rights to reproduce, disclose its contents, or to manufacture, use or sell anything it may describe.

Technical information is subject to change at the discretion of B-K Lighting Inc. For the most current technical data, please refer to bklighting.com

VERSA STAR - Ceiling Recessed - Low Voltage - LED High-Power - Junction Box

(formerly Versa Star / VS-LED), (formerly Versa Star / VSL-LED), (formerly Versa Star / VQ-LED), & (formerly Versa Star / VQL-LED)

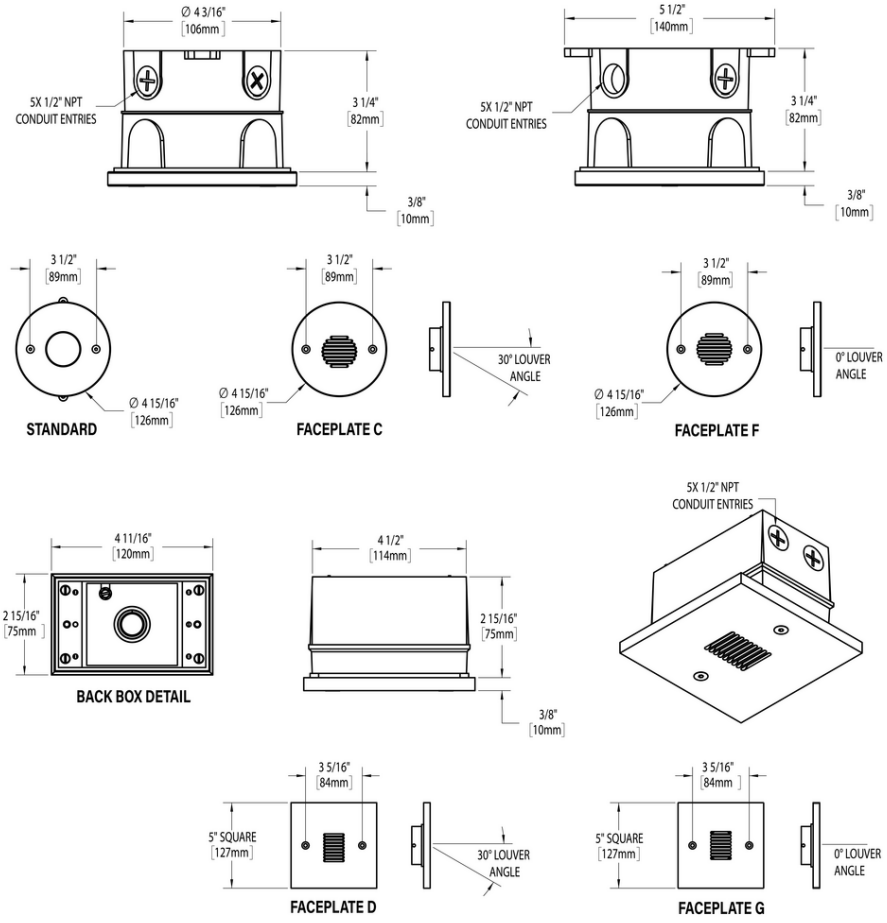

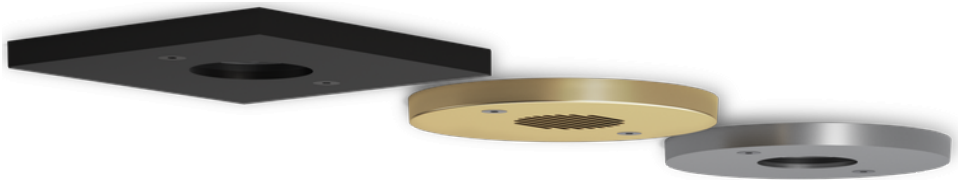

Finishes

MAS	POS	BLP	BZP	WHP
SAP	BLW	BZW	WHW	VER
CMG	RMG	AMG	TXF	BCM
BGE	WCP	OCP	HUG	ABP
BPP	SDS	WIR	CAP	CRM
AQW	NBP	MAB	POB	MIT
RAL	CUSTOM			
RAL	CUS			

For more detailed information and visuals regarding our finishes, visit www.bklighting.com/finishes

B-K LIGHTING AMERICAN MADE + EMPLOYEE OWNED | 40429 Brickyard Drive, Madera, CA 93636 | +1 (559) 438-5800 | info@bklighting.com | bklighting.com

Copyright © B-K Lighting, Inc. This document contains proprietary information of B-K Lighting, inc. and its receipt or possession does not convey any rights to reproduce, disclose its contents, or to manufacture, use or sell anything it may describe.

Technical information is subject to change at the discretion of B-K Lighting Inc. For the most current technical data, please refer to bklighting.com

VERSA STAR - Ceiling Recessed - Low Voltage - LED High-Power - Junction Box

(formerly Versa Star / VS-LED), (formerly Versa Star / VSL-LED), (formerly Versa Star / VQ-LED), & (formerly Versa Star / VQL-LED)

IP66

Features



Anti-condensation vent allows moisture to exit the fixture but never enter in



Lens factory adhered to fixture cap providing hermetically sealed optical compartment



Secured with flush, countersunk tamper resistant hardware



Machined solid billet faceplate provides unmatched strength and durability



Manufactured in the USA with sustainable processes



Water-tight anti-siphon plug prevents moisture ingress from wireways



Easily replaceable modular components reduce waste and extend fixture life



Solid billet fixture body provides unmatched durability and heat management

Technical

Driver: Low Voltage

Light Source (Type): LED High-Power

Material: Stainless Steel, Brass, Aluminum

CCT (K): Amber, 2700, 3500, 3000, 4000

CRI: 80, 90

Input Power (W): 5

Delivered Lumens (lm): 29 - 355

Beam Angle (°): 13, 16, 23, 31

Control: MLV dimming capable via compatible remote magnetic transformer. See Mountings & Power Supplies section to order.

Shape: Square, Round

Mount: Junction Box

Style: Faceplate: Louvered - Pattern D - 30° Angle - Rectangular, Faceplate: Louvered - Pattern G - 0° Angle - Rectangular, Faceplate: Standard, Faceplate: Louvered - Pattern C - 30° Angle - Round, Faceplate: Louvered - Pattern F - 0° Angle - Round

Input Voltage: 12V

Lens: Soft Focus, Rectilinear

Shielding: Not included (Standard), Honeycomb Baffle

Wiring Length: Standard

Finish: Stainless Steel Finishes, Standard Finishes, Premium Finishes, Brass Finishes, Other - RAL, Other - Custom Color

IP Rating: IP66 rated

Weight (lbs): 1.58 - 3.05

Source to Lens Distance (in): 1.02 - 1.07

Material Detail: Furnished in stainless steel (304)., Furnished in brass (360)., Furnished in copper-free aluminum (6061-T6).

Faceplate: Fully machined from solid billet. Countersunk holes provide for flush hardware mounting. Accommodates two (2) lens or louver media.

Aiming: Adjustable optical bracket provides up to 24° vertical aiming.

Light Source Detail: High power LEDs modular design with electrical disconnects., Adjust-e-Lume, an LED board feature, allows for dynamic lumen response at the individual fixture. Indexed (100% to 25% nom.) lumen output. Maintains output at desired level or may be changed (A9 to A1). Standard preset from the factory is A9 (100%).

Optics: Interchangeable optics permit changes in the field.

Hardware: Tamper-resistant, stainless steel hardware. Hardware is black oxide treated for additional corrosion resistance.

Sealing: 1/8" thick HT-805A silicone foam gasket with acrylic adhesive for water-tight seal.

Finish Detail: Metal finish option only for stainless steel material., Powder coat or metal finish options available for brass material., StarGuard, our 15-stage chromate-free process, cleans and conversion coats aluminum components prior to application of Class 'A' TGIC polyester powder coating. It is RoHS compliant.

Warranty: 5-year limited warranty.

Certification: Made in USA, UL Listed, Suitable for Wet Locations

WARNING: This is a low voltage product. Please check "Mountings With A Power Supply" or "Power Supplies" to order remote transformer separately.

Copyright © B-K Lighting, Inc. This document contains proprietary information of B-K Lighting, inc. and its receipt or possession does not convey any rights to reproduce, disclose its contents, or to manufacture, use or sell anything it may describe.

Technical information is subject to change at the discretion of B-K Lighting Inc. For the most current technical data, please refer to bklighting.com

Updated 11/21/2026

VERSA STAR - Ceiling Recessed - Low Voltage - LED High-Power - Junction Box

(formerly Versa Star / VS-LED), (formerly Versa Star / VSL-LED), (formerly Versa Star / VQ-LED), & (formerly Versa Star / VQL-LED)

Light Source

Configure your product to display exact performance values

Light Source	Optic	Beam Angle	CCT (K)	CRI	Input Power (W)	Delivered Lumens (Lm)	CBCP
-	-	-	-	-	-	-	-

Without selecting your configuration

Light Source	Optic	Beam Angle	CCT (K)	CRI	Input Power (W)	Delivered Lumens (Lm)	CBCP
e100	NSP - Narrow Spot	13°	2700	80	5	33	
e100	SP - Spot	16°	2700	80	5	32	
e100	SP2 - Spot	23°	2700	80	5	29	
e100	MFL - Medium Flood	31°	2700	80	5	29	
e101	NSP - Narrow Spot	13°	3000	80	5	34	
e101	SP - Spot	16°	3000	80	5	33	
e101	SP2 - Spot	23°	3000	80	5	29	
e101	MFL - Medium Flood	31°	3000	80	5	29	
e102	NSP - Narrow Spot	13°	4000	80	5	38	
e102	SP - Spot	16°	4000	80	5	37	
e102	SP2 - Spot	23°	4000	80	5	33	
e102	MFL - Medium Flood	31°	4000	80	5	33	
e103	MFL - Medium Flood		Amber		5		
e103	NSP - Narrow Spot		Amber		5		
e103	SP - Spot		Amber		5		
e103	SP2 - Spot		Amber		5		
e104	MFL - Medium Flood		2700	90	5		
e104	NSP - Narrow Spot		2700	90	5		
e104	SP - Spot		2700	90	5		
e104	SP2 - Spot		2700	90	5		
e105	SP2 - Spot		3000	90	5		
e105	NSP - Narrow Spot		3000	90	5		
e105	MFL - Medium Flood		3000	90	5		
e105	SP - Spot		3000	90	5		
e106	NSP - Narrow Spot	13°	3500	80	5		
e106	SP - Spot	16°	3500	80	5		
e106	SP2 - Spot	23°	3500	80	5		
e106	MFL - Medium Flood	31°	3500	80	5		
e100	NSP - Narrow Spot	13°	2700	80	5	33	
e100	SP - Spot	16°	2700	80	5	32	
e100	SP2 - Spot	23°	2700	80	5	29	
e100	MFL - Medium Flood	31°	2700	80	5	29	
e101	NSP - Narrow Spot	13°	3000	80	5	34	
e101	SP - Spot	16°	3000	80	5	33	
e101	SP2 - Spot	23°	3000	80	5	29	
e101	MFL - Medium Flood	31°	3000	80	5	29	
e102	NSP - Narrow Spot	13°	4000	80	5	38	
e102	SP - Spot	16°	4000	80	5	37	
e102	SP2 - Spot	23°	4000	80	5	33	
e102	MFL - Medium Flood	31°	4000	80	5	33	
e103	MFL - Medium Flood		Amber		5		
e103	NSP - Narrow Spot		Amber		5		
e103	SP - Spot		Amber		5		
e103	SP2 - Spot		Amber		5		
e104	MFL - Medium Flood		2700	90	5		
e104	NSP - Narrow Spot		2700	90	5		

Copyright © B-K Lighting, Inc. This document contains proprietary information of B-K Lighting, inc. and its receipt or possession does not convey any rights to reproduce, disclose its contents, or to manufacture, use or sell anything it may describe.

Technical information is subject to change at the discretion of B-K Lighting Inc. For the most current technical data, please refer to bklighting.com

VERSA STAR - Ceiling Recessed - Low Voltage - LED High-Power - Junction Box

(formerly Versa Star / VS-LED), (formerly Versa Star / VSL-LED), (formerly Versa Star / VQ-LED), & (formerly Versa Star / VQL-LED)

Light Source	Optic	Beam Angle	CCT (K)	CRI	Input Power (W)	Delivered Lumens (Lm)	CBCP
e104	SP - Spot		2700	90	5		
e104	SP2 - Spot		2700	90	5		
e105	NSP - Narrow Spot		3000	90	5		
e105	MFL - Medium Flood		3000	90	5		
e105	SP - Spot		3000	90	5		
e105	SP2 - Spot		3000	90	5		
e106	NSP - Narrow Spot	13°	3500	80	5		
e106	SP - Spot	16°	3500	80	5		
e106	SP2 - Spot	23°	3500	80	5		
e106	MFL - Medium Flood	31°	3500	80	5		
e100	NSP - Narrow Spot	13°	2700	80	5	309	3938
e100	SP - Spot	16°	2700	80	5	301	2988
e100	SP2 - Spot	23°	2700	80	5	269	1134
e100	MFL - Medium Flood	31°	2700	80	5	271	743
e101	NSP - Narrow Spot	13°	3000	80	5	316	4029
e101	SP - Spot	16°	3000	80	5	316	4029
e101	SP2 - Spot	23°	3000	80	5	275	1161
e101	MFL - Medium Flood	31°	3000	80	5	277	760
e102	NSP - Narrow Spot	13°	4000	80	5	355	4527
e102	SP - Spot	16°	4000	80	5	346	3434
e102	SP2 - Spot	23°	4000	80	5	309	1304
e102	MFL - Medium Flood	31°	4000	80	5	311	854
e103	MFL - Medium Flood		Amber		5		
e103	NSP - Narrow Spot		Amber		5		
e103	SP - Spot		Amber		5		
e103	SP2 - Spot		Amber		5		
e104	MFL - Medium Flood		2700	90	5		
e104	NSP - Narrow Spot		2700	90	5		
e104	SP - Spot		2700	90	5		
e104	SP2 - Spot		2700	90	5		
e105	MFL - Medium Flood		3000	90	5		
e105	NSP - Narrow Spot		3000	90	5		
e105	SP - Spot		3000	90	5		
e105	SP2 - Spot		3000	90	5		
e106	NSP - Narrow Spot	13°	3500	80	5		
e106	SP - Spot	16°	3500	80	5		
e106	SP2 - Spot	23°	3500	80	5		
e106	MFL - Medium Flood	31°	3500	80	5		
e100	NSP - Narrow Spot	13°	2700	80	5	140	
e100	SP - Spot	16°	2700	80	5	130	
e100	SP2 - Spot	23°	2700	80	5	126	
e100	MFL - Medium Flood	31°	2700	80	5	78	
e101	NSP - Narrow Spot	13°	3000	80	5	143	
e101	SP - Spot	16°	3000	80	5	133	
e101	SP2 - Spot	23°	3000	80	5	129	
e101	MFL - Medium Flood	31°	3000	80	5	80	
e102	NSP - Narrow Spot	13°	4000	80	5	161	
e102	SP - Spot	16°	4000	80	5	150	
e102	SP2 - Spot	23°	4000	80	5	145	
e102	MFL - Medium Flood	31°	4000	80	5	91	
e103	SP - Spot		Amber		5		
e103	SP2 - Spot		Amber		5		
e103	MFL - Medium Flood		Amber		5		
e103	NSP - Narrow Spot		Amber		5		
e104	MFL - Medium Flood		2700	90	5		
e104	NSP - Narrow Spot		2700	90	5		
e104	SP - Spot		2700	90	5		

Copyright © B-K Lighting, Inc. This document contains proprietary information of B-K Lighting, inc. and its receipt or possession does not convey any rights to reproduce, disclose its contents, or to manufacture, use or sell anything it may describe.

Technical information is subject to change at the discretion of B-K Lighting Inc. For the most current technical data, please refer to bklighting.com

VERSA STAR - Ceiling Recessed - Low Voltage - LED High-Power - Junction Box

(formerly Versa Star / VS-LED), (formerly Versa Star / VSL-LED), (formerly Versa Star / VQ-LED), & (formerly Versa Star / VQL-LED)

Light Source	Optic	Beam Angle	CCT (K)	CRI	Input Power (W)	Delivered Lumens (Lm)	CBCP
e104	SP2 - Spot		2700	90	5		
e105	MFL - Medium Flood		3000	90	5		
e105	NSP - Narrow Spot		3000	90	5		
e105	SP2 - Spot		3000	90	5		
e105	SP - Spot		3000	90	5		
e106	NSP - Narrow Spot	13°	3500	80	5		
e106	SP - Spot	16°	3500	80	5		
e106	SP2 - Spot	23°	3500	80	5		
e106	MFL - Medium Flood	31°	3500	80	5		
e100	NSP - Narrow Spot	13°	2700	80	5	89	
e100	SP - Spot	16°	2700	80	5	171	
e100	SP2 - Spot	23°	2700	80	5	158	
e100	MFL - Medium Flood	31°	2700	80	5	89	
e101	NSP - Narrow Spot	13°	3000	80	5	200	
e101	SP - Spot	16°	3000	80	5	175	
e101	SP2 - Spot	23°	3000	80	5	162	
e101	MFL - Medium Flood	31°	3000	80	5	91	
e102	NSP - Narrow Spot	13°	4000	80	5	224	
e102	SP - Spot	16°	4000	80	5	196	
e102	SP2 - Spot	23°	4000	80	5	182	
e102	MFL - Medium Flood	31°	4000	80	5	102	
e103	MFL - Medium Flood		Amber		5		
e103	NSP - Narrow Spot		Amber		5		
e103	SP - Spot		Amber		5		
e103	SP2 - Spot		Amber		5		
e104	MFL - Medium Flood		2700	90	5		
e104	NSP - Narrow Spot		2700	90	5		
e104	SP - Spot		2700	90	5		
e104	SP2 - Spot		2700	90	5		
e105	MFL - Medium Flood		3000	90	5		
e105	NSP - Narrow Spot		3000	90	5		
e105	SP - Spot		3000	90	5		
e105	SP2 - Spot		3000	90	5		
e106	NSP - Narrow Spot	13°	3500	80	5		
e106	SP - Spot	16°	3500	80	5		
e106	SP2 - Spot	23°	3500	80	5		
e106	MFL - Medium Flood	31°	3500	80	5		

Copyright © B-K Lighting, Inc. This document contains proprietary information of B-K Lighting, inc. and its receipt or possession does not convey any rights to reproduce, disclose its contents, or to manufacture, use or sell anything it may describe.

Technical information is subject to change at the discretion of B-K Lighting Inc. For the most current technical data, please refer to bklighting.com